System Description

Vacuum Connections

For Troubleshooting of DTC related components, see chart on page 11-52.

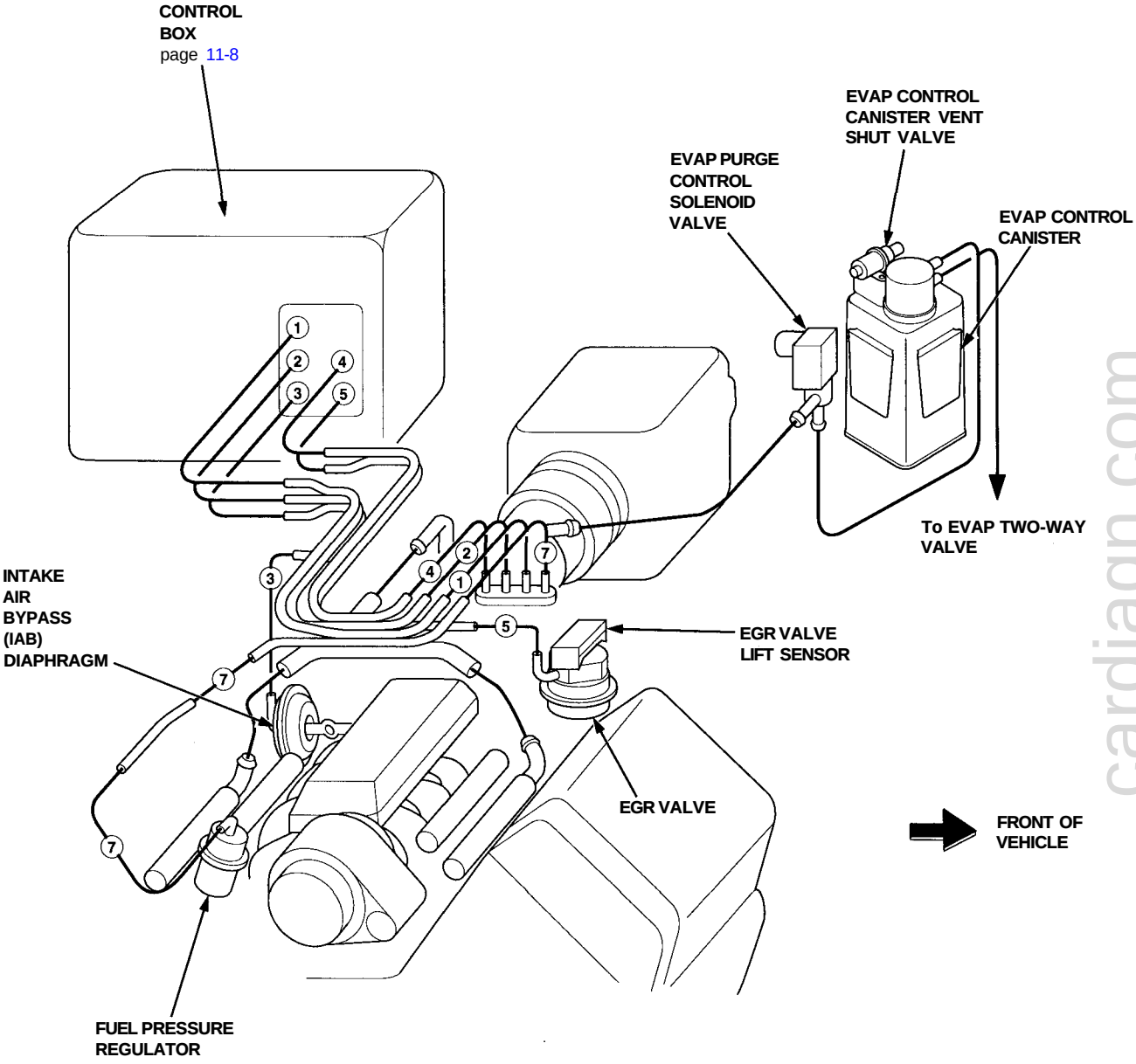

cardiagn.com

(cont'd)

System Description

Vacuum Connections (cont'd)

Control Box

For Troubleshooting of DTC related components, see chart on page 11-52.

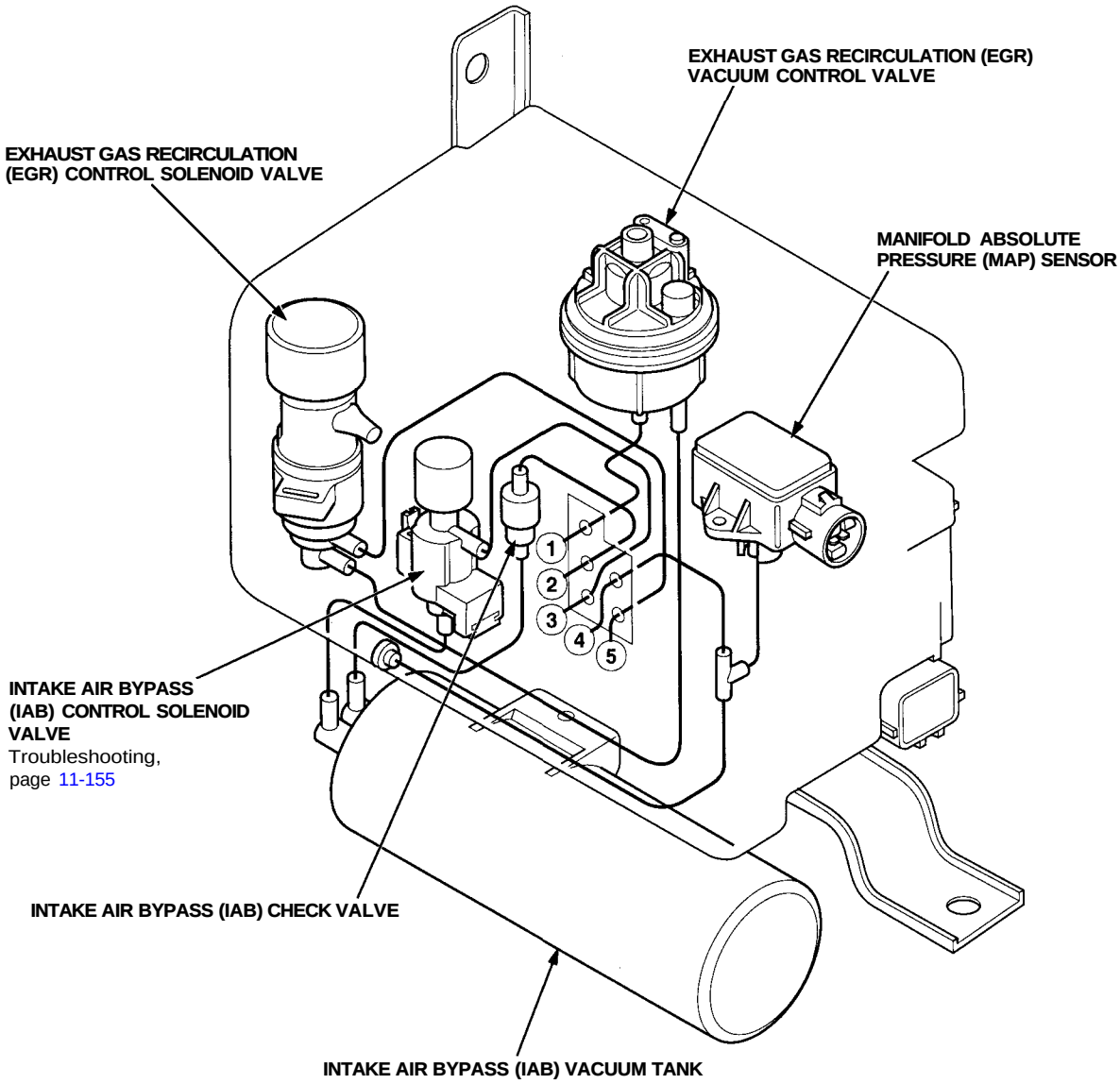

cardiagn.com

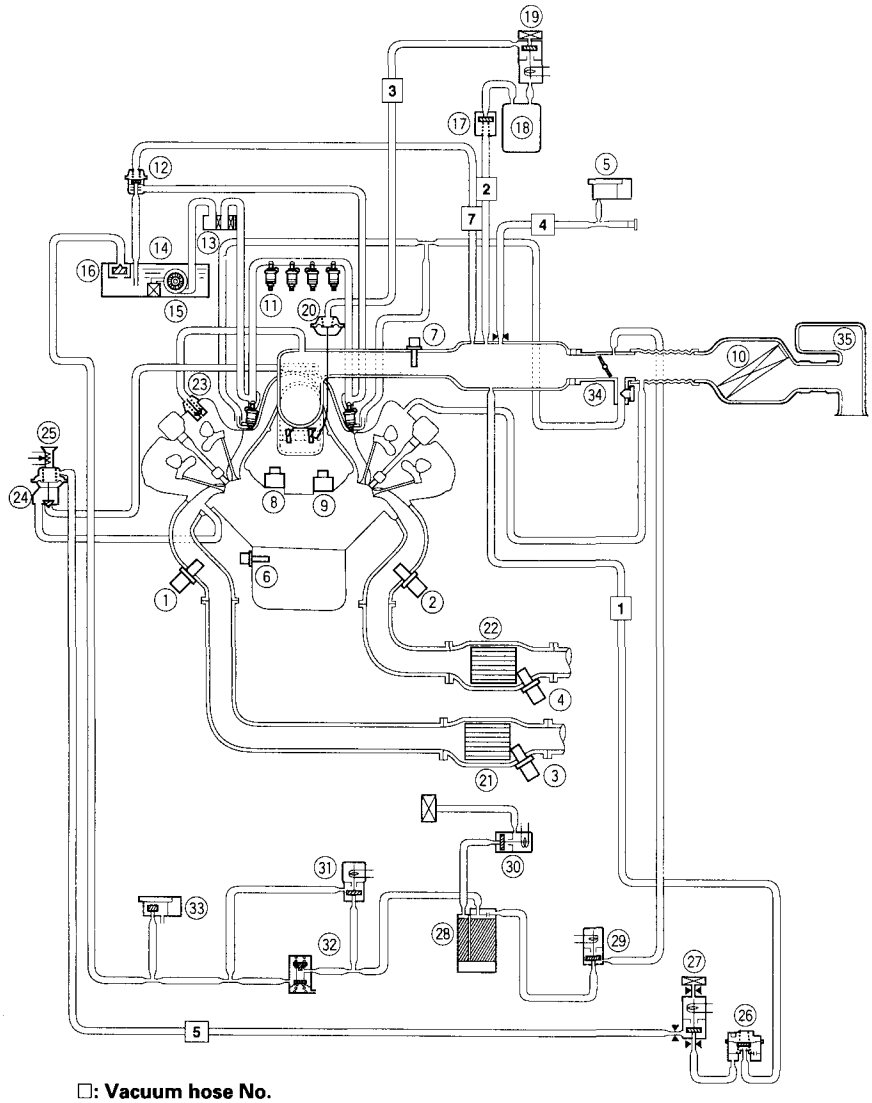

□: Vacuum hose No.

① FRONT PRIMARY HEATED OXYGEN SENSOR (HO2S) (BANK 2, SENSOR 1)
② REAR PRIMARY HEATED OXYGEN SENSOR (HO2S) (BANK 1, SENSOR 1)
③ FRONT SECONDARY HEATED OXYGEN SENSOR (HO2S) (BANK 2, SENSOR 2)
④ REAR SECONDARY HEATED OXYGEN SENSOR (HO2S) (BANK 1, SENSOR 2)
⑤ MANIFOLD ABSOLUTE PRESSURE (MAP) SENSOR
⑥ ENGINE COOLANT TEMPERATURE (ECT) SENSOR
⑦ INTAKE AIR TEMPERATURE (IAT) SENSOR
⑧ FRONT KNOCK SENSOR (KS2)
⑨ REAR KNOCK SENSOR (KS1)
⑩ AIR CLEANER (ACL)
⑪ FUEL INJECTOR
⑫ FUEL PRESSURE REGULATOR
⑬ FUEL FILTER
⑭ FUEL PUMP (FP)
⑮ FUEL TANK
⑯ FUEL TANK EVAPORATIVE EMISSION (EVAP) VALVE
⑰ INTAKE AIR BYPASS (IAB) CHECK VALVE
⑱ INTAKE AIR BYPASS (IAB) VACUUM TANK
⑲ INTAKE AIR BYPASS (IAB) CONTROL SOLENOID VALVE
⑳ INTAKE AIR BYPASS (IAB) CONTROL DIAPHRAGM
㉑ FRONT THREE WAY CATALYTIC CONVERTER (TWO
㉒ REAR THREE WAY CATALYTIC CONVERTER (TWO
㉓ POSITIVE CRANKCASE VENTILATION (PCV) VALVE
㉔ EXHAUST GAS RECIRCULATION (EGR) VALVE
㉕ EXHAUST GAS RECIRCULATION (EGR) VALVE LIFT SENSOR
㉖ EXHAUST GAS RECIRCULATION (EGR) VACUUM CONTROL VALVE
㉗ EXHAUST GAS RECIRCULATION (EGR) CONTROL SOLENOID VALVE
㉘ EVAPORATIVE EMISSION (EVAP) CONTROL CANISTER
㉙ EVAPORATIVE EMISSION (EVAP) PURGE CONTROL SOLENOID VALVE
㉚ EVAPORATIVE EMISSION (EVAP) CONTROL CANISTER VENT SHUT VALVE
㉛ EVAPORATIVE EMISSION (EVAP) BYPASS SOLENOID VALVE
㉜ EVAPORATIVE EMISSION (EVAP) TWO WAY VALVE
㉝ FUEL TANK PRESSURE SENSOR
㉞ THROTTLE BODY (TB)
㉟ RESONATOR

cardiagn.com